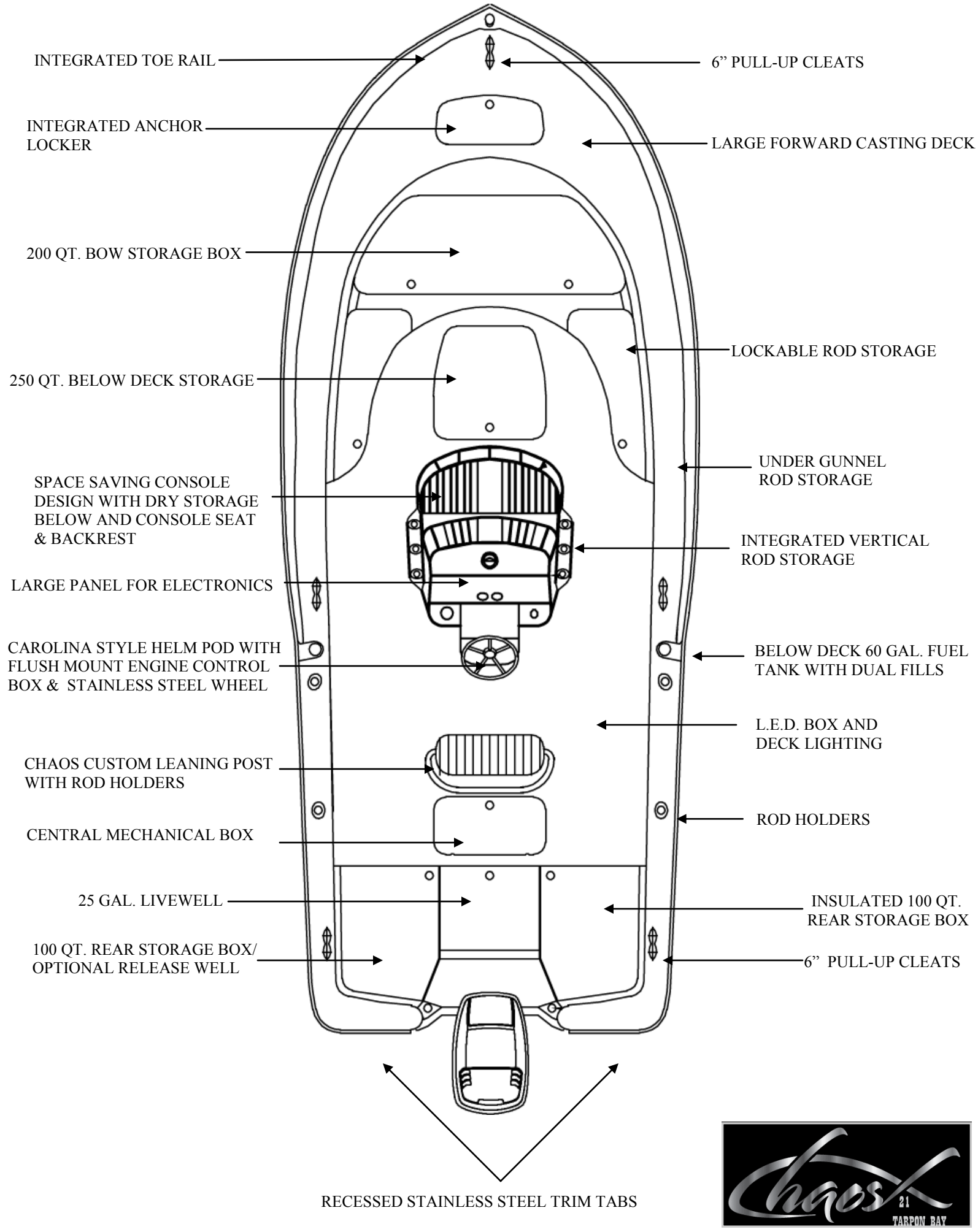
INTEGRATED TOE RAIL
6” PULL-UP CLEATS
INTEGRATED ANCHOR LOCKER
LARGE FORWARD CASTING DECK
200 QT. BOW STORAGE BOX
LOCKABLE ROD STORAGE
250 QT. BELOW DECK STORAGE
UNDER GUNNEL ROD STORAGE
SPACE SAVING CONSOLE DESIGN WITH DRY STORAGE BELOW AND CONSOLE SEAT & BACKREST
INTEGRATED VERTICAL ROD STORAGE
LARGE PANEL FOR ELECTRONICS
CAROLINA STYLE HELM POD WITH FLUSH MOUNT ENGINE CONTROL BOX & STAINLESS STEEL WHEEL
BELOW DECK 60 GAL. FUEL TANK WITH DUAL FILLS
L.E.D. BOX AND DECK LIGHTING
CHAOS CUSTOM LEANING POST WITH ROD HOLDERS
ROD HOLDERS
CENTRAL MECHANICAL BOX
25 GAL. LIVEWELL
INSULATED 100 QT. REAR STORAGE BOX
100 QT. REAR STORAGE BOX/ OPTIONAL RELEASE WELL
6” PULL-UP CLEATS
RECESSED STAINLESS STEEL TRIM TABS
chaos
21
TARPON BAY